WARMER 3 DRAWER

MANUFACTURING SINCE 1966



Model: AWD0003

ELECTRIC

FEATURES

- Three drawers each accepting a standard gastronorm 1/1 100mm pan
- Independently operated temperature controls
- Heavy duty telescopic drawer slides
- Temperature display for each drawer
- Adjustable air vents
- Powerful 750W heating elements
- Double wall construction for efficient insulation
- Operating temperature range: 30°C - 110°C

NOTE:

Model: AWD0003

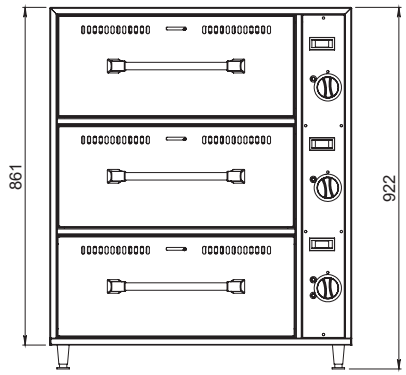

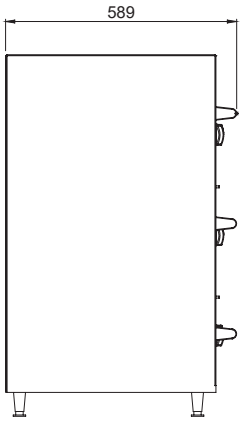

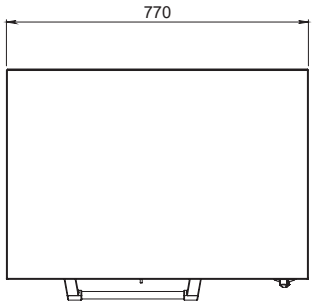

SPECIFICATIONS

POWER	2.25kW
VOLTAGE	230V - 50Hz
PACKAGING (W x D x H)	790 x 610 x 910 (mm)
UNIT (W x D x H)	770 x 589 x 891 (mm)
NET WEIGHT	35kg
GROSS WEIGHT	37kg
SHIPPING VOLUME	0.44m^3
DRAWER CAPACITY	530 x 325 (mm) 1/1 Gastronorm

NOTE

- When viewing the appliance from the front in it's usual operating position, the width (W) of the product is the total distance from left to right; the depth (D) of the product is the total distance from the front to the back; the height (H) is the total distance from the bottom of the product to the top. Pictures may vary from actual product.

DISCLAIMER

- Output performance figures quoted are dependent on various factors. Anvil reserves the right, without notice, to make changes and revisions to product specifications, materials and design, when we believe it will provide better performance, durability, and efficiency. Unit measurements may vary depending on point of reference.

ALL ANVIL EQUIPMENT COMES WITH A TWO YEAR WARRANTY ON COMPONENTS AND DEFECTIVE WORKMANSHIP.

www.anvilworld.com

Published Date: 2026.06.18